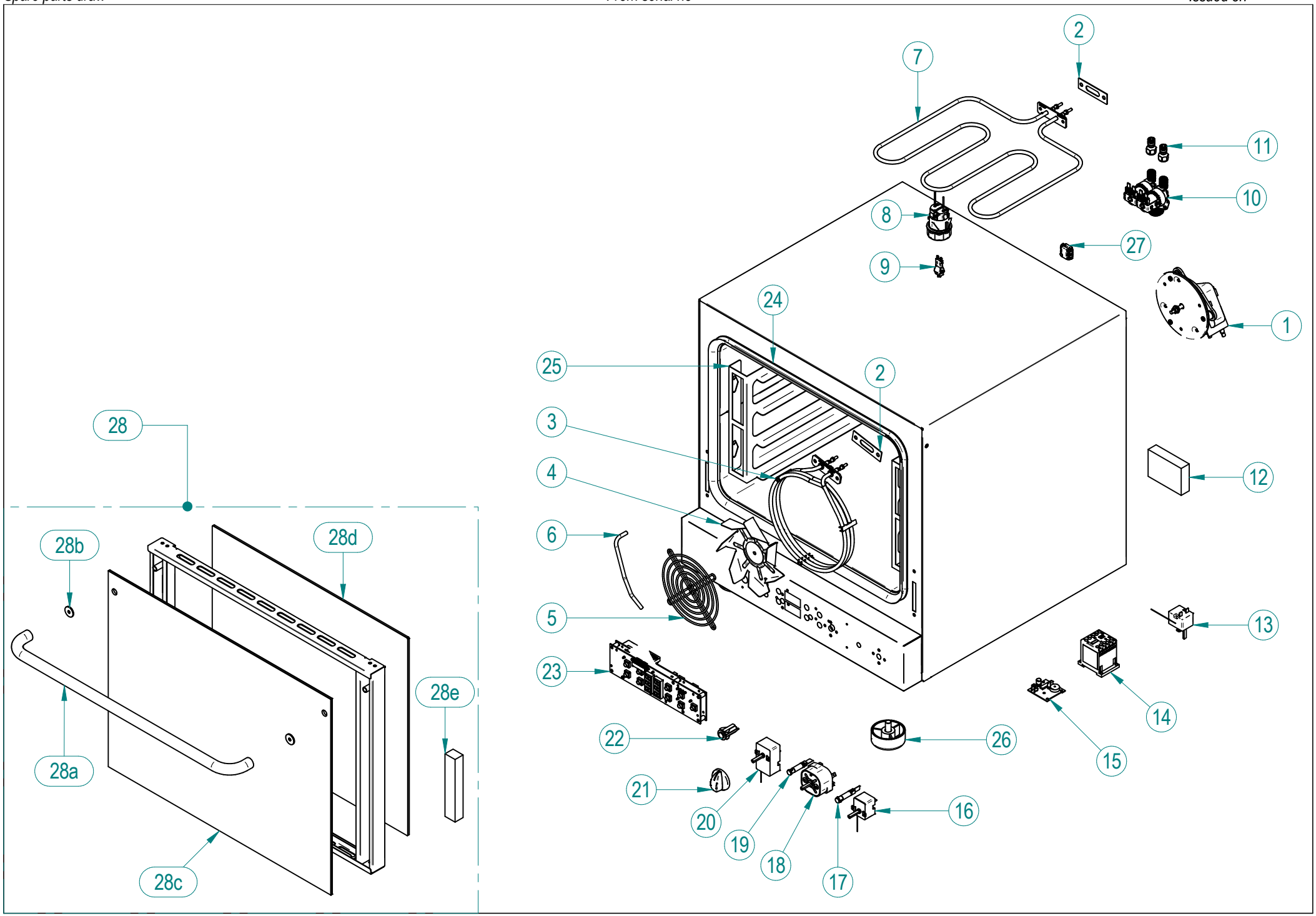

QUESTO DISEGNO E' DI NOSTRA PROPRIETA' E NON PUO' ESSERE USATO O RIPRODOTTO SENZA LA NOSTRA AUTORIZZAZIONE / THIS DRAWING BELONG SOLELY TO OUR COMPANY AND CANNOT BE USED OR RIPRODUCED WITHOUT OUR LICENCE.

Data:					Cod. esploso												
21/06/2018	**Nice & Go** **Tilt-up door**				B04.0005.00	GCA-304E2	GCA-404E2	GCA-304E	GCA-404E	GCA-304ES	GCA-404ES	GUA-304E	GUA-404E	GUA-304ES	GUA-404ES	GUP-304ES	GUP-404ES
Pos.	**Descrizione**	**Description EN**	**Description FR**	**Beschreibung**	**Codice**	**Q.tà**											
1	Motore	motor	moteur	Motor	DS0020-00	2	2	2	2	2	2	2	2	2	2	2	2
2	Guarnizione resistenza	heating element gasket	joint résistance	Heizungdichtung	PTPS-006	2	2	2	2	3	3	2	2	3	3	3	3
3	Resistenza	heating element	résistance	Heizungelement	LC-020	2	2	-	-	2	2	-	-	2	2	2	2
					LC-024	-	-	2	2	-	-	2	2	-	-	-	-
4	Ventola	fan	ventilateur	Lüfter	DS0010-00	2	2	2	2	2	2	2	2	2	2	2	2
5	Griglia ventilazione	ventilation grid	grille de ventilation	Lüftunsgitter	NGO0040-00	2	2	2	2	2	2	2	2	2	2	2	2
6	Tubo acqua camera	cooking chamber water injection pipe	tube injection chambre de cuisson	Wassereinspritzrohr	HC-113	-	-	-	-	-	-	2	2	2	2	2	2
7	Salamandra	salamander	salamandre	Salamnder	LC-022	-	-	-	-	1	1	-	-	1	1	1	1
8	Portalampada	bulb socket	support de lampe	Lampenfassung	LC-053	1	1	1	1	1	1	1	1	1	1	1	1
9	Lampada	lamp	lampe	Birne	LC-051	1	1	1	1	1	1	1	1	1	1	1	1
10	Elettrovalvola	solenoid valve	eléctrovanne	Elektroventil	LC-540	-	-	-	-	-	-	1	1	1	1	1	1
11	Raccordo tubo x elettrov.	solenoid valve fitting	raccord tuyau électrovanne	Rohrverschrabung Elektroventil	HR-660	-	-	-	-	-	-	2	2	2	2	2	2
12	Morsettiera	terminal board	terminal	Klemmleiste	FX0141-00	1	1	1	1	1	1	1	1	1	1	1	1
13	Term Sicurezza	safety thermostat	thermostat de sécurité	Sicherheit Thermostat	LC-376	1	1	1	1	1	1	1	1	1	1	1	1
14	Contattore	contactor	contacteur	Kontaktor	LC-310	2	2	2	2	2	2	2	2	2	2	2	2
15	Buzzer	buzzer	sonnerie	Summer	C5366-00	1	1	1	1	1	1	1	1	1	1	-	-
16	Termostato	thermostat	thermostat	Thermostat	LC-375	1	1	1	1	1	1	1	1	1	1	-	-
17	Lampada spia arancio	orange pilot lamp	voyant orange	Orange Kontrollampe	C5411-00	1	1	1	1	2	2	1	1	2	2	-	-
18	Temporizzatore	timer	minuterie	Timer	LC-366	1	1	1	1	1	1	1	1	1	1	-	-
19	Lampada spia verde	green pilot lamp	voyant vert	Grün Kontrollampe	C5410-00	1	1	1	1	1	1	1	1	1	1	-	-
20	Timer	timer	minuterie	Timer	LC-367	-	-	-	-	1	1	-	-	1	1	-	-
21	Manopola	knob	manette	Knopf	C5385-12	2	2	2	2	3	3	2	2	3	3	-	-
22	Pulsante	push button	bouton	Drhetaste	C5421-00	-	-	-	-	-	-	1	1	1	1	-	-
23	Tastiera elettronica	electronic keyboard	clavier eléctronique	Platine	MC-921	-	-	-	-	-	-	-	-	-	-	1	1
24	Guarnizione camera	cooking chamber gasket	joint chambre de cuisson	Garraum Dichtung	NGG0027-00	1	1	1	1	1	1	1	1	1	1	1	1
25	Portateglie dx 433x333	tray-slides 433x333 right	glissières 433x333 droit	Einschubschienen rechts 433x333	NGG0018-00	-	1	-	1	-	1	-	1	-	1	-	1
	Portateglie sx 433x333	tray-slides 433x333 left	glissières 433x333 gauche	Einschubschienen links 433x333	NGG0019-00	-	1	-	1	-	1	-	1	-	1	-	1
	Portateglie dx 2/3 GN	tray-slides GN 2/3 right	glissières GN 2/3 droit	Einschubschienen rechts 2/3 GN	NGG0020-00	1	-	1	-	1	-	1	-	1	-	1	-
	Portateglie sx 2/3 GN	tray-slides GN 2/3 left	glissières GN 2/3 gauche	Einschubschienen links 2/3 GN	NGG0021-00	1	-	1	-	1	-	1	-	1	-	1	-
26	Piedino	foot	pied du four	Fuβ	HC-902	4	4	4	4	4	4	4	4	4	4	4	4
27	Equipotenziale	equipotential	équipontential	Equipotential	LC-413	1	1	1	1	1	1	1	1	1	1	1	1
28	Porta	oven door	porte du four	Tür	C14.0113.00	1	1	1	1	1	1	1	1	1	1	1	1
28a	Maniglia	door handle	poignée de porte	Türgriff	C12.0067.00	1	1	1	1	1	1	1	1	1	1	1	1
28b	Piattina gomma	gasket	joint	Gummidichtung	C52.0009.00	2	2	2	2	2	2	2	2	2	2	2	2
28c	Vetro esterno	external glass	verre extérieure	Aussenglass	C56.0021.00	1	1	1	1	1	1	1	1	1	1	1	1
28d	Vetro interno	internal glass	verre intérieure	Innerenglass	C56.0020.00	1	1	1	1	1	1	1	1	1	1	1	1
28e	Cerniera	hinge	charnière	Scharnier	HC-110	2	2	2	2	2	2	2	2	2	2	2	2